SKY MEDIUM F

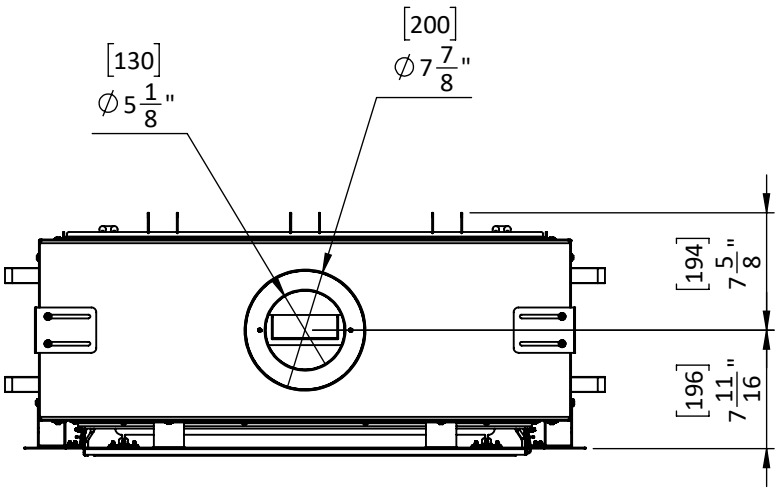

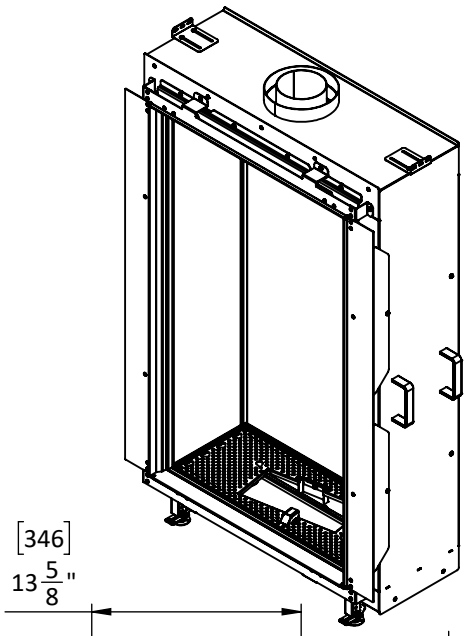

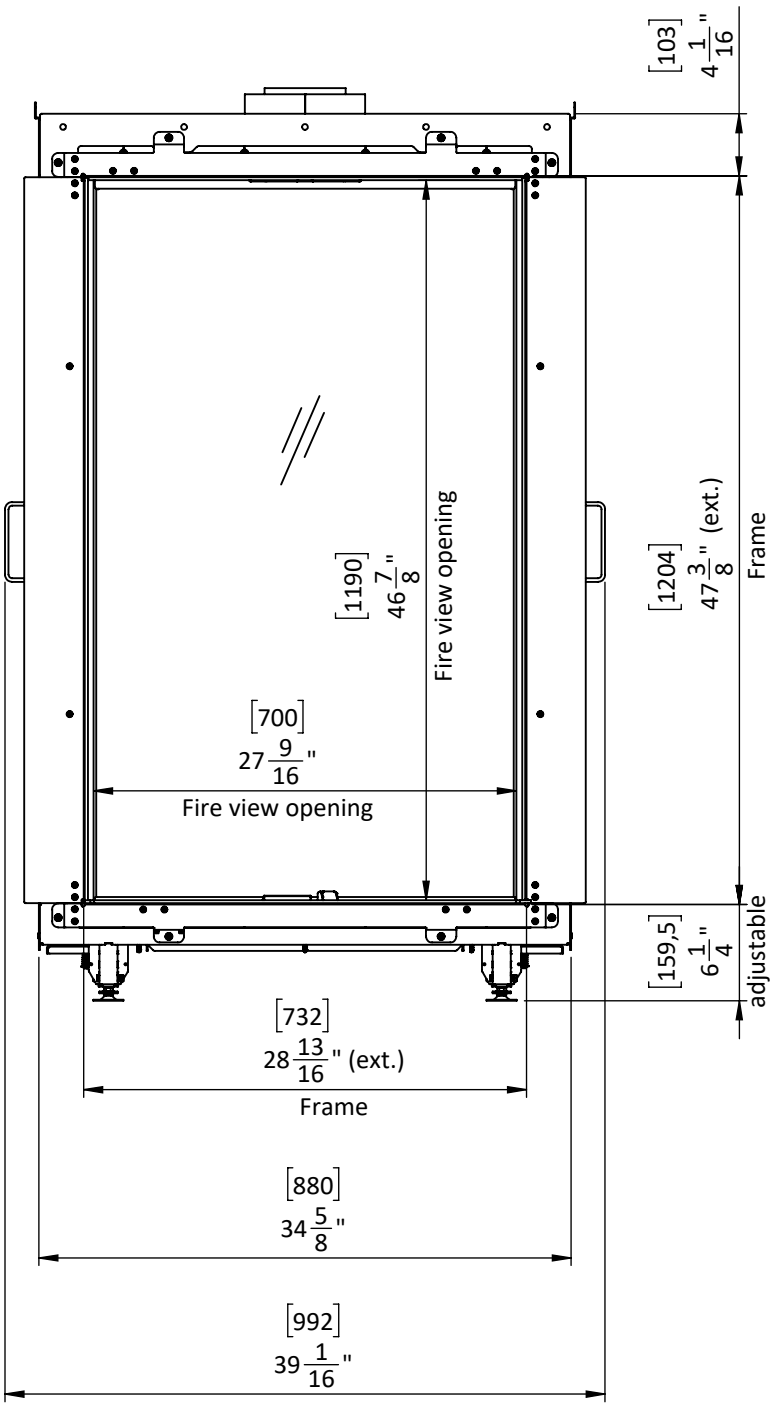

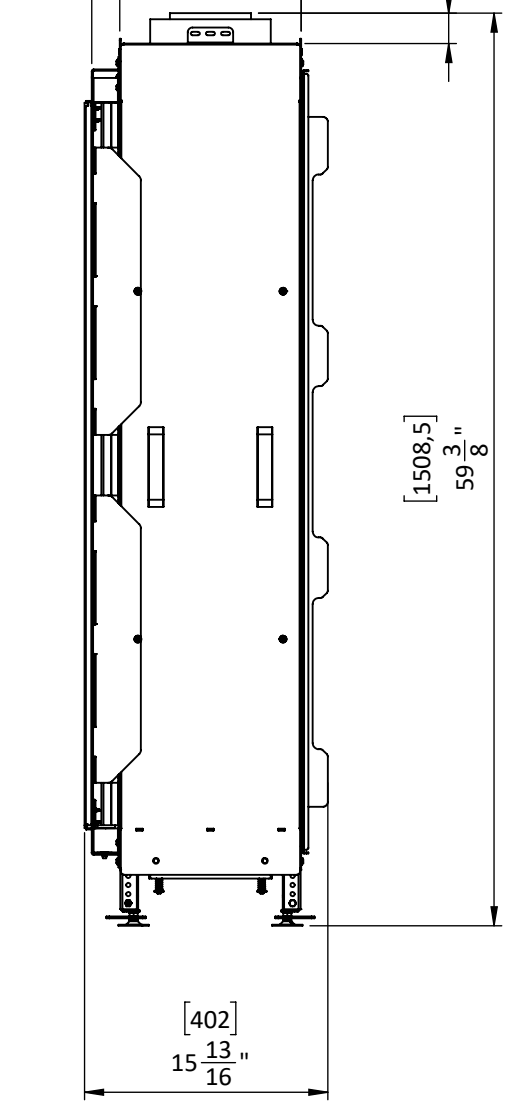

ELEMENT 4